gridPak

ALPHATRON

Packages for grid-connected PV Solar Systems including:

- PV Modules
- Support Structures
- String Inverters
- Monitoring
- Connection Materials

gridPak – the easy way to generate power from the sun

gridPak

Alphatron gridPak are convenient kitsets to build PV Solar generators that can feed power back into the grid. Each package includes all materials required for the installation of the system: PV modules, support structure, string inverter, connection materials and (optional) monitoring.
Each gridPak is a tuned system that achieves the maximum performance from the equipment.

gridPak are designed and configured to comply with relevant electrical standards AS/NZS3000, AS4777, AS/NZS5033 and related product specifications and the NZ Building Code.

gridPak are used in grid-connected systems and as PV generator in microGrid systems.

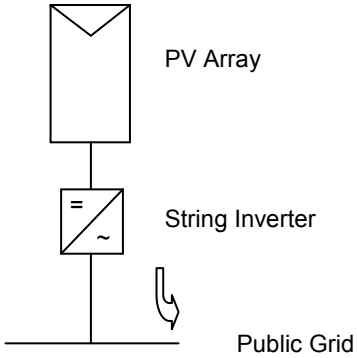

The PV Array
A selection of framed crystalline or amorphous roof integrated PVL laminates is available.
Framed modules are supplied including roof mount support structure (contact us for stand-alone support solutions or building integrated mounting).
All modules are manufactured by leading European or American manufacturers and comply with all relevant safety standards.

The String Inverter
Connection to the grid is made through a German made waterproof SunnyBoy string inverter from SMA. SMA is the leading manufacturer for string inverters worldwide.
MPPT tracking of the PV modules ensures maximum yield from the installed PV array.
In addition to providing for highly efficient energy transfer from PV array to the grid, the SunnyBoy provides for safe connection in compliance with AS4777.

High Voltage String and DC Connection Materials
The PV modules are connected in series as high-voltage strings. Using high voltage strings gives the best possible efficiency while reducing the amount of cabling required. To connect the modules together, first quality connection materials are required. The Alphatron gridPak comes with Swiss made MC-Solar connectors and Flex-Sol dual sleeved, UV resistant solar cable.

A set of regulatory warning signs is supplied to help the installer to comply with regulatory requirements for grid connected PV solar systems.

Optional Monitoring
Optional wireless monitoring provides for daily, monthly and yearly performance graphs and control over system settings. In a glance the user can see the total energy generated and CO_2 emission avoided.
For commercial applications alphaView public display and internet broadcast solutions are available.

Product Images SMA Technologie AG. Errors and omissions accepted. Specifications may change without prior notice

Join our solar generation!
www.alphatrononline.com

PV Laminate gridPak for roof integration

PVL64 2849 x 394 mm
PVL128 5486 x 394 mm

PVL amorphous laminates are bonded directly to the roof. No support structure is required. The laminates are highly flexible and can follow curves in the roof. Using amorphous Silicon, these modules perform better under low light and scattered light conditions as compared to crystalline modules. They also are less affected by the negative effects of high temperature, resulting in a higher energy production per Wp installed PV.

Because PVL arrays require no support structure, they are the **most cost effective** solution to build a PV system.
PVL arrays also have the **lowest embodied energy** of the different PV technologies, so it takes less energy to manufacture a kWp of PVL as compared to other PV technologies. Combined with the reduced amount of raw materials required (no glass, no aluminium, no highly purified silicon), this makes PVL the **environmental choice** of PV module.

Contact Alphatron for suitable New Zealand-manufactured roofing profiles.

				PV Array		Min roof dim.		Akl. Yield*	CO2-e**
gridPak	strings	string length	# modules	[Wp]	Inverter	h [m]	w [m]	[kWh/yr]	[kg]
GP-PVL68-12	1	12	12	816	SB1100	3	6	1281	769
GP-PVL68-13	1	13	13	884	SB1100	3	6.5	1387	832
GP-PVL68-20	2	10	20	1360	SB1100	3	10	2135	1281
GP-PVL68-24	2	12	24	1632	SB1700	3	12	2561	1537
GP-PVL68-26	2	13	26	1768	SB1700	3	13	2775	1665
GP-PVL68-28	2	14	28	1904	SB1700	3	14	2988	1793
GP-PVL68-30	3	10	30	2040	SB1700	3	15	3201	1921
GP-PVL68-34	2	17	34	2312	SB2500	3	17	3629	2177
GP-PVL68-36	2	18	36	2448	SB2500	3	18	3842	2305
GP-PVL68-38	2	19	38	2584	SB2500	3	19	4055	2433
GP-PVL68-40	2	20	40	2720	SB2500	3	20	4269	2562
GP-PVL136-7	1	7	7	952	SB1100	5.6	3.5	1494	896
GP-PVL136-10	2	5	10	1360	SB1100	5.6	5	2135	1281
GP-PVL136-12	2	6	12	1632	SB1700	5.6	6	2561	1537
GP-PVL136-14	2	7	14	1904	SB1700	5.6	7	2988	1793
GP-PVL136-16	2	8	16	2176	SB2500	5.6	8	3415	2049
GP-PVL136-18	2	9	18	2448	SB2500	5.6	9	3842	2305
GP-PVL136-20	2	10	20	2720	SB2500	5.6	10	4269	2562
GP-PVL136-24	3	8	24	3264	SB3300	5.6	12	5123	3074
GP-PVL136-27	3	9	27	3672	SB3300	5.6	13.5	5763	3458
GP-PVL136-32	4	8	32	4352	SB3800	5.6	16	6830	4098
GP-PVL136-36	4	9	36	4896	SMC5000A	5.6	18	7684	4610
GP-PVL136-40	4	10	40	5440	SMC5000A	5.6	20	8538	5123
GP-PVL136-45	5	9	45	6120	SMC6000A	5.6	22.5	9605	5763
GP-PVL136-50	5	10	50	6800	SMC6000A	5.6	25	10672	6403

*Estimates based on mathematical models and historical weather data for Auckland.
** CO_2-e conversion factor 0.6 kg/kWh

Crystalline framed module gridPak

gridPak

IS-160/24	1590 x 790 mm
IS-160S/24	1224 x 1047 mm
ISF-200/18	1515 x 982 mm
IS-220/32	1600 x 1046 mm

Mono Crystalline modules give the highest output per available roof area of any PV technology and are a good choice if space is at a premium.
Framed modules are mounted on a support structure. The standard gridPak come with a support structure for roof mounting (alternative mounting options such as field mounting or building integration are available). Framed modules can be added to almost any roof and systems can be easily retrofitted.
The standard Alphatron crystalline gridPaks are based on high quality European made modules from Isofoton and are registered under the PV GAP quality certification program.

As responsible manufacturer, Isofoton have implemented a proactive and audited Environmental Management System based on the **UNE-ES ISO 14001** to ensure that waste is minimised during the manufacturing process and that the embodied energy per kWp produced is as low as possible.

For the 160 modules, versions with different dimensions are available to provide maximum flexibility when fitting the array to different sized roofs. The dimensions of the Isofoton modules are compatible with standard glazing and building cladding systems, allowing them to be used in building integrated applications.

				PV Array		Min roof dim.		Akl. Yield*	CO2-e**
gridPak	strings	string length	# modules	[Wp]	Inverter	h [m]	w [m]	[kWh/yr]	[kg]
GP-IS160-6***	1	6	6	960	SB1100	3.2	2.4	1404	842
GP-IS160-7	1	7	7	1120	SB1100	1.6	5.6	1638	983
GP-IS160-8	1	8	8	1280	SB1100	3.2	3.2	1872	1123
GP-IS160-12	2	6	12	1920	SB1700	3.2	4.8	2808	1685
GP-IS160/12-16	1	16	16	2560	SB2500	3.2	6.4	3744	2246
GP-IS160-18	2	9	18	2880	SB2500	3.2	7.2	4212	2527
GP-IS160-24	3	8	24	3840	SB3300	4.8	6.4	5616	3370
GP-IS160-27	3	9	27	4320	SB3800	4.8	7.2	6318	3791
GP-IS160-33	3	11	33	5280	SMC5000A	4.8	8.8	7722	4633
GP-IS160-36	3	12	36	5760	SMC5000A	4.8	9.6	8424	5054
GP-IS160/12-38	2	19	38	6080	SMC5000A	3.2	15.2	8892	5335
GP-IS160/12-40	2	20	40	6400	SMC6000A	6.4	8	9360	5616
GP-ISF200-8	1	8	8	1600	SB1700	1.52	8	2384	1430
GP-ISF200-9	1	9	9	1800	SB1700	1.52	9	2682	1609
GP-ISF200-12	1	12	12	2400	SB2500	3.04	6	3576	2146
GP-ISF200-14	1	14	14	2800	SB2500	3.04	7	4172	2503
GP-ISF200-20	2	10	20	4000	SB3300	3.04	10	5960	3576
GP-ISF200-26	2	13	26	5200	SMC5000A	3.04	13	7748	4649
GP-ISF200-28	2	14	28	5600	SMC5000A	6.08	7	8344	5006
GP-ISF200-30	2	15	30	6000	SMC5000A	3.04	15	8940	5364
GP-ISF200-32	2	16	32	6400	SMC6000A	6.08	8	9536	5722
GP-IS220-8	2	4	8	1760	SB1700	1.6	8	2624	1574
GP-IS220-18	3	6	18	3960	SB3300	3.2	9	5904	3542
GP-IS220-24	3	8	24	5280	SMC5000A	4.8	8	7872	4723
GP-IS220-27	3	9	27	5940	SMC5000A	4.8	9	8856	5314
GP-IS220-28	4	7	28	6160	SMC6000A	6.4	7	9184	5510

* Estimates are based on mathematical models and historical weather data for Auckland.
** CO_2-e conversion factor 0.6 kg/kWh
*** Use suffix "S" in item code to order gridPak with IS-160S modules (e.g. GP-IS160S-8)

For alternative configurations or systems to use with alternative PV Modules, please contact your Alphatron dealer.

gridPak monitoring and control solutions

A number of optional monitoring and control packages are available to monitor and log the performance of your gridPak. The monitoring packages work with any gridPak and can be easily retrofitted to existing gridPak installations.

SunnyBeam monitoring Package

The SunnyBeam monitoring package has been designed to monitor small to medium sized PV plants on a stand-alone wireless display. No data cabling is required for the SunnyBeam system.
Daily and monthly power graphs are displayed on the SunnyBeam display, including CO_2 emissions reductions and kWh generated to date.
A USB port allows easy interfacing to a computer for data storage and plant monitoring and control via SunnyData software.

The SunnyBeam package contains the following:

- SunnyBeam display
- Wireless communication card for the inverter

Sunny WebBox monitoring Package

The Sunny WebBox provides easy interfacing of the PV plant to the internet. The system can be monitored and controlled from any PC with internet access and a web browser.
With the optional SensorBox, a complete weather data and system performance monitoring and data logger can be built. The data collected can be used for applications such as updating internet websites in real time or to drive large public displays.

The Sunny WebBox package contains the following:

- Sunny WebBox with RS485 port
- RS485 communication board for the inverter
- 10m data cable

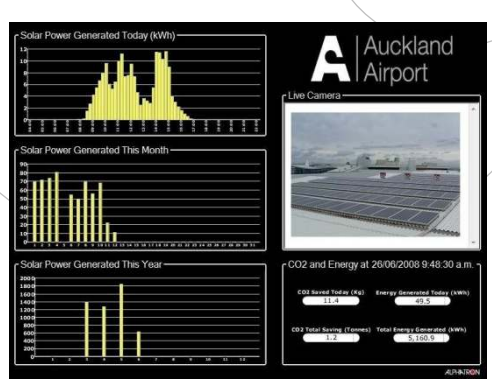

alphaView Public Display Package

The alphaView public display package has been designed to display performance data on large LCD screens. Data such as power generated and CO_2-e emissions avoided can be presented in clear graphs. It also enables internet access to the system for remote monitoring and maintenance and can enable presentation of the data via company website. The alphaView system further implements logging of the data in a searchable windows database.
The alphaView display can be customized to user specifications
The alphaView package contains the following:

- SunnyWebBox with RS485 port
- RS485 comms port for the inverter
- Embedded industrial PC
- alphaView software

www.alphatrononline.com

Alphatron Pacific Ltd. T: +64 9 414 5520, F: +64 9 414 5580, E: sales@alphatron.co.nz
Alphatron Australia T: 180 148 793, F: 1800 888 334, E: sales@alphatron.com.au